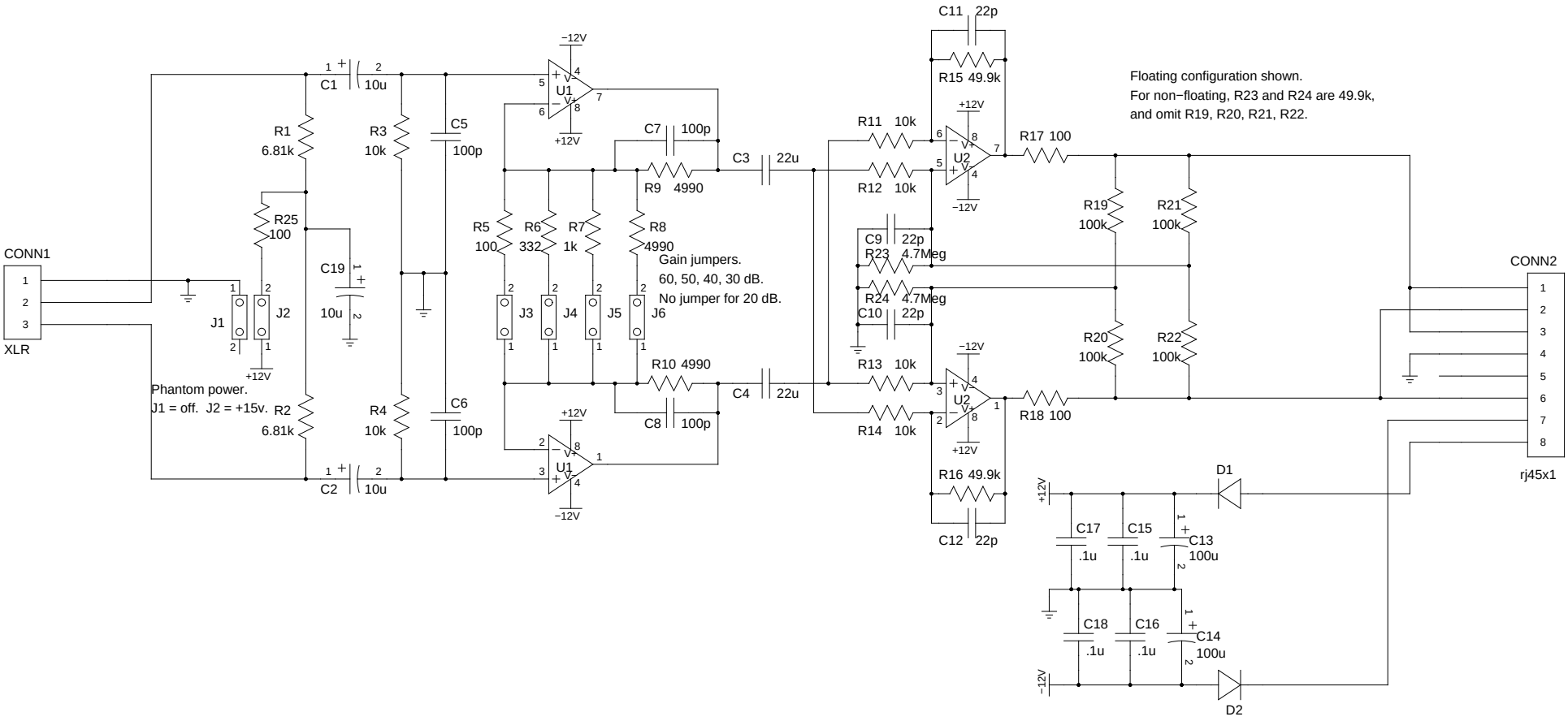
CONN1
XLR
J1
J2
+12V
Phantom power.
J1 = off. J2 = +15v.
R25
100
R1
6.81k
R2
6.81k
C1
10u
C2
10u
C19
10u
R3
10k
R4
10k
C5
100p
C6
100p
−12V
U1
+12V
C7
100p
R9 4990
R10 4990
C8
100p
R5
100
R6
332
R7
1k
R8
4990
J3
J4
J5
J6
Gain jumpers.
60, 50, 40, 30 dB.
No jumper for 20 dB.
C3
22u
C4
22u
C11 22p
R15 49.9k
R11 10k
R12 10k
U2
R17 100
C9
22p
R23 4.7Meg
R24 4.7Meg
C10
22p
R13 10k
R14 10k
R16 49.9k
C12 22p
R18 100
R19
100k
R20
100k
R21
100k
R22
100k
Floating configuration shown.
For non−floating, R23 and R24 are 49.9k,
and omit R19, R20, R21, R22.
CONN2
rj45x1
D1
D2
C17
.1u
C15
.1u
C13
100u
C18
.1u
C16
.1u
C14
100u