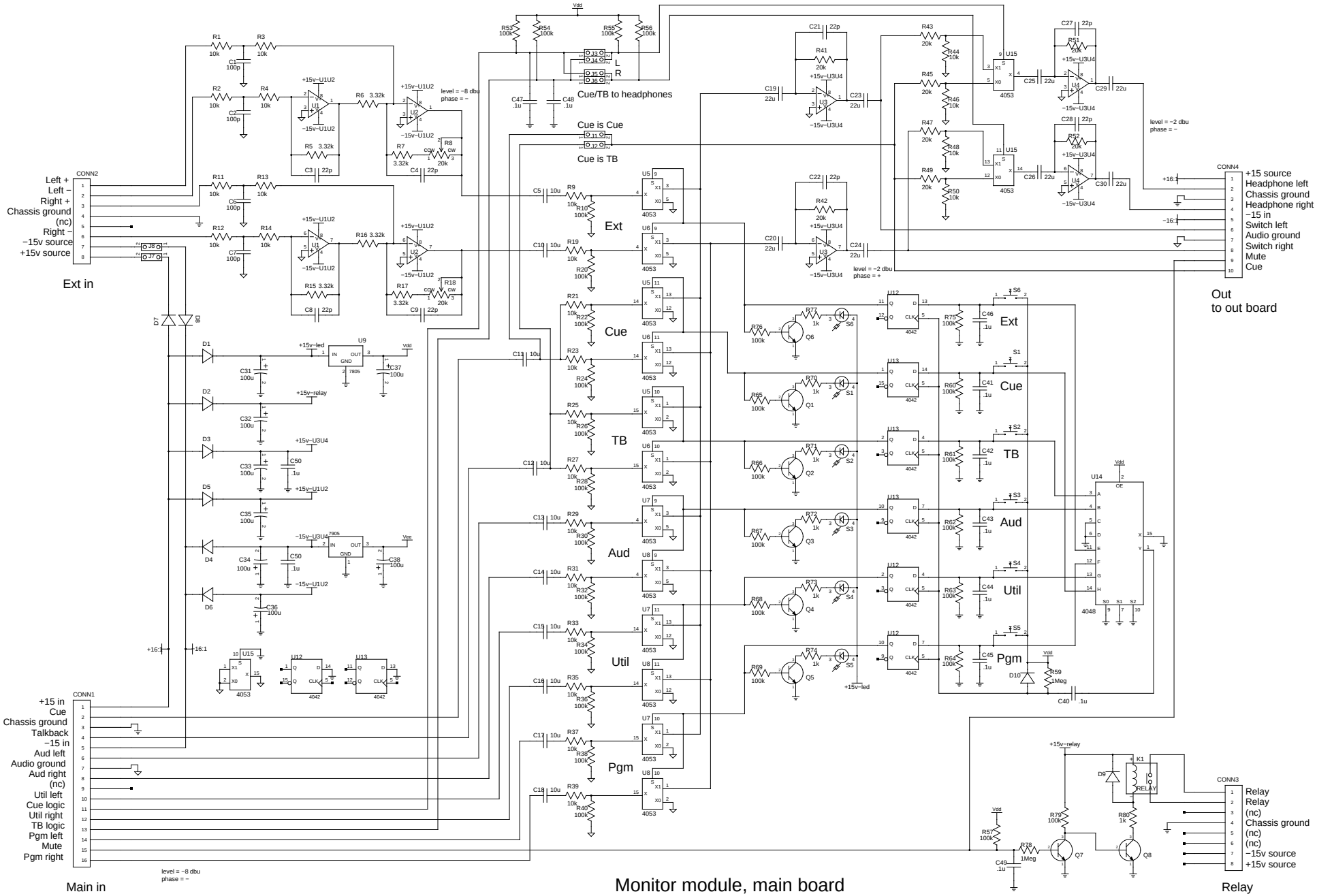
Ext in
Left +
Left −
Right +
Chassis ground
(nc)
Right −
−15v source
+15v source
CONN2
Main in
+15 in
Cue
Chassis ground
Talkback
−15 in
Aud left
Audio ground
Aud right
(nc)
Util left
Cue logic
Util right
TB logic
Pgm left
Mute
Pgm right
CONN1
Cue/TB to headphones
Cue is Cue
Cue is TB
Ext
Cue
TB
Aud
Util
Pgm
Out
to out board
+15 source
Headphone left
Chassis ground
Headphone right
−15 in
Switch left
Audio ground
Switch right
Mute
Cue
CONN4
Relay
Relay
(nc)
Chassis ground
(nc)
(nc)
−15v source
+15v source
CONN3
Relay
level = −8 dbu
phase = −
level = −2 dbu
phase = +
level = −2 dbu
phase = −
level = −8 dbu
phase = −
Monitor module, main board
rev 2: 2017−09−19